# INSTALLATION INSTRUCTIONS




**Cleaning Notes**

- Spray with a firm water spray to remove any loose dirt.
- Wash with water, detergent and a soft cloth or sponge.
- Do not use petroleum based solvents or abrasives.
- Do not drive for four hours after installation.
- Do not use automatic car wash.



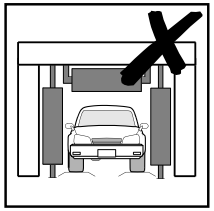

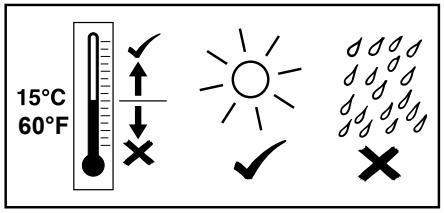


For Technical Support/ Warranty Information please call: 800-757-7075




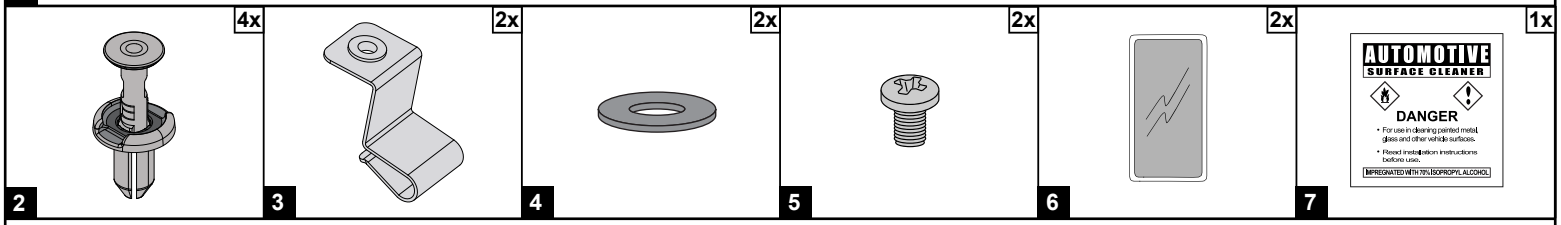


**Tools Required**







**1**

Open the hood.

Thoroughly clean the top and underside of the hood and surrounding areas.

Wipe away any residue and allow to completely dry.

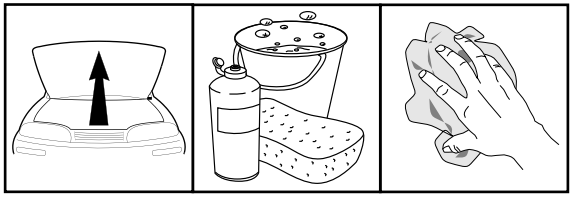

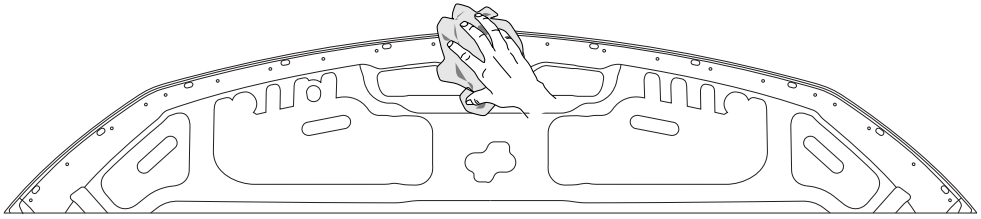

**UNDERSIDE OF HOOD**

**INSTALLATION INSTRUCTIONS**

**2**

Trial fit the Hood Protector centrally onto the hood.

With a non-permanent marker, note and mark the positions of the four acrylic tag slots in the Hood Protector onto the hood where they correspond to the rubber trim retaining plugs.

Note and mark the positions of the two outer holes in the Hood Protector onto the hood.

Remove the Hood Protector.

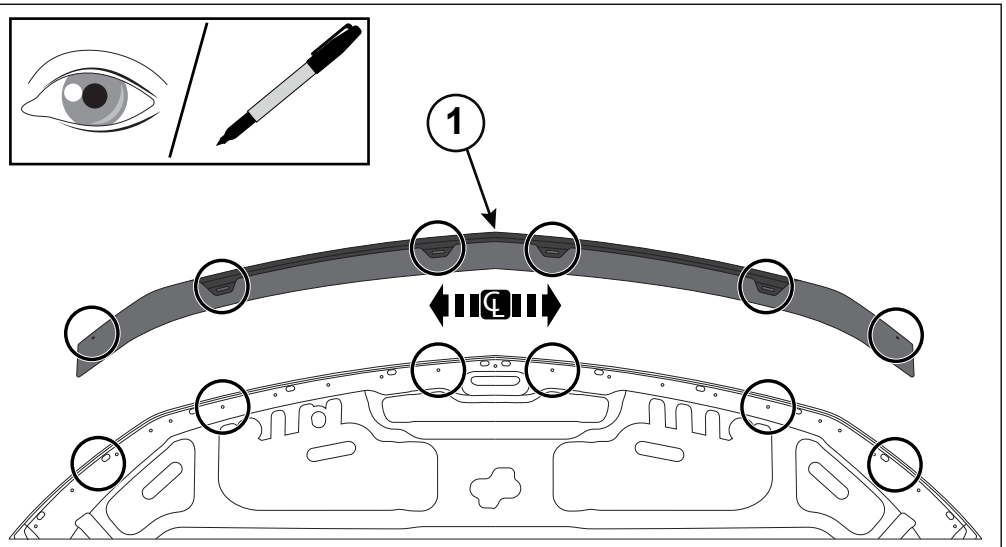


**3**

Install the Hood Protector onto the hood ensuring that the holes in the hood aligns with the slots in the Hood Protector at the indicated locations.

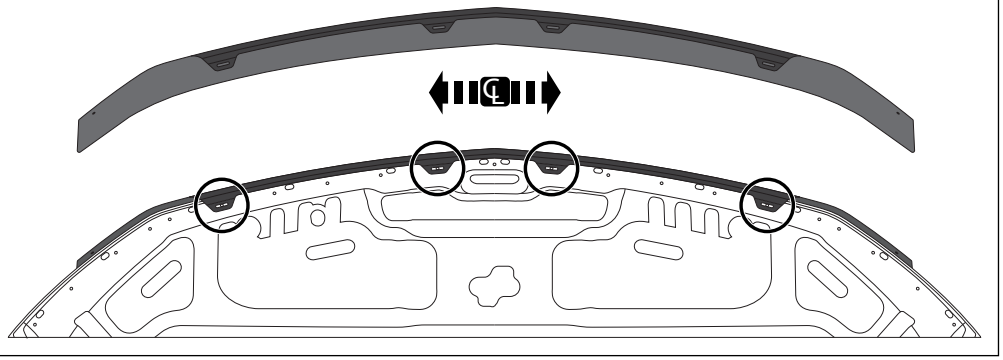

**INSTALLATION INSTRUCTIONS**

**4**

Insert the four Scrivets into the hood holes and secure the Hood Protector to the hood.

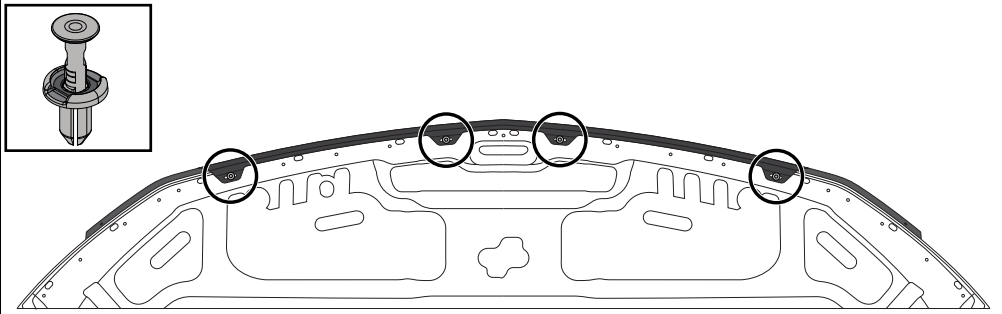

**5**

At the two outermost locations, clean the noted areas with the Alcohol Prep Pad provided.

Wipe off any residue with a dry clean cloth. Adhere the Abrasive-Resistant Tape Strips over the hood lip.

Apply Tape so approximately half of each Strip is adhered to the topside and half is adhered to the underside of hood.

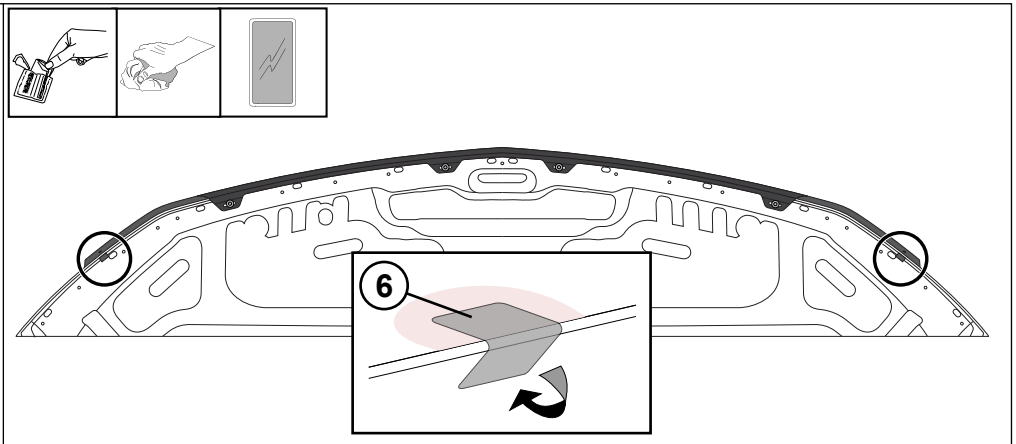


**6**

Slide the Wing Clips over the Abrasive-Resistant Tape Strips on the hood edge at the two previously noted outer hole positions.

**IMPORTANT: Ensure the Clips rest over the Abrasive-Resistant Tape and do not come in contact with the hood paint work. Failure to do this may result in permanent paint damage.**

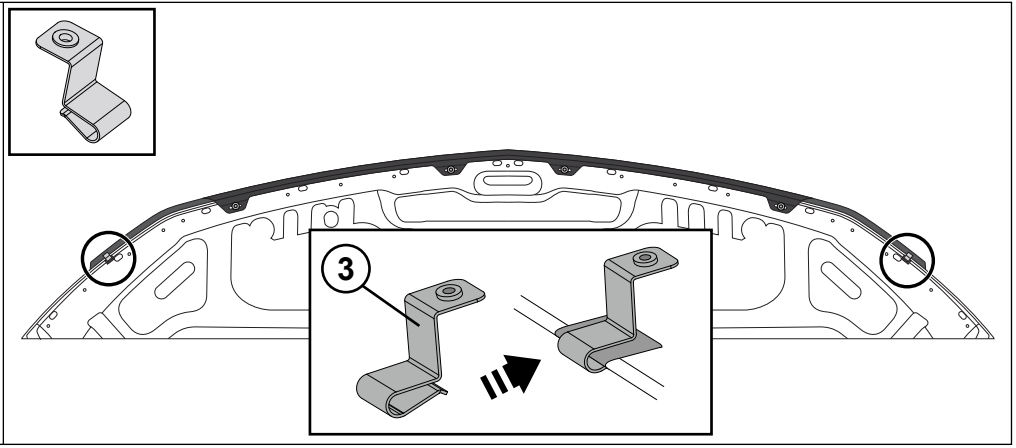

**INSTALLATION INSTRUCTIONS**

**7**

Secure the Hood Protectors to the Wing Clips with the Small Screws and Washers provided.

**Important: Do not overtighten screws.**

**TO REMOVE:** Reverse the above procedures.

